INSTRUCTION MANUAL

DIGITAL FUNCTION GENERATOR

Model: TFG-8111

TOPWARD

INSTRUCTION MANUAL

DIGITAL FUNCTION GENERATOR

Model: TFG-8111

TOPWARD

TABLE of CONTENTS

Picture of Model TFG-8111..... 1
Introduction..... 2
Before We Begin..... 3
Front Panel of the Model TFG-8111..... 4
Front Panel Description..... 5
Operating Instructions..... 8
Operating Cautions.....10
Theory of Operation.....11
Calibration.....14
Troubleshooting.....16
Adjustment Location.....20
Block Diagram.....21
Circuit Diagram.....22
Component Layout.....26
Specifications.....27
Parts List.....29

PICTURE of MODEL TFG-8111

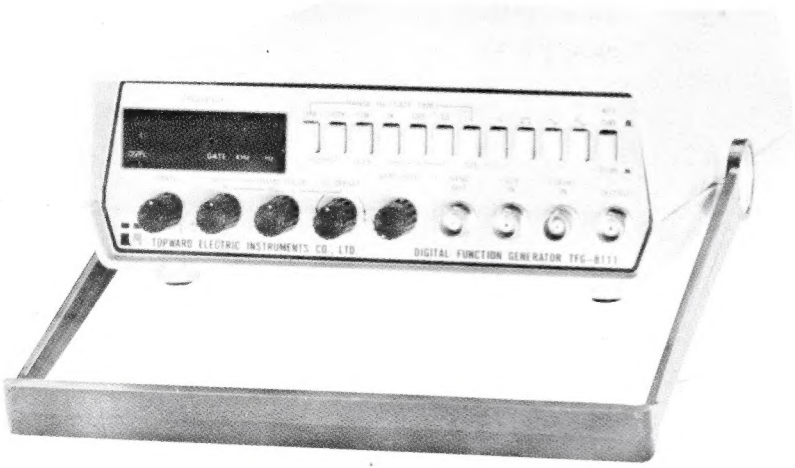

INTRODUCTION

The Topward TFG-8111 is a portable, bench type multi-purpose digital function generator/counter capable of producing 5 different waveforms. These are Sine, Square, Triangle, Pulse and Ramp.

The model TFG-8111 features: Adjustable frequency range from 0.1 Hz to 2 MHz in 7 ranges, variable output amplitude from 5 mV to 20 Vp-p, variable symmetry/duty cycle from 5% to 95% in the Ramp/Pulse mode, continuous or externally controlled outputs, DC offset between -10 V to +10 V can be added to all output waveforms, inverted and attenuated output, built-in 100 MHz frequency counter with 25 mV input sensitivity.

FREQ GOES TO .03 HZ SINE
(QUITS "OUTPUT HI" BELOW THIS)

BEFORE WE BEGIN

Your Topward TFG-8111 is packed in styrofoam to protect it during shipment. You should keep this material, and the shipping box, in case the unit must be moved or shipped again.

The box should contain the following items:

Model TFG-8111 Digital Function Generator
Removable AC line cord
BNC to alligator clip cable
Instruction manual

Please check to see that all of the above items are included. You should contact your Topward dealer if anything is missing.

FRONT PANEL of the MODEL TFG-8111

Figure - 1

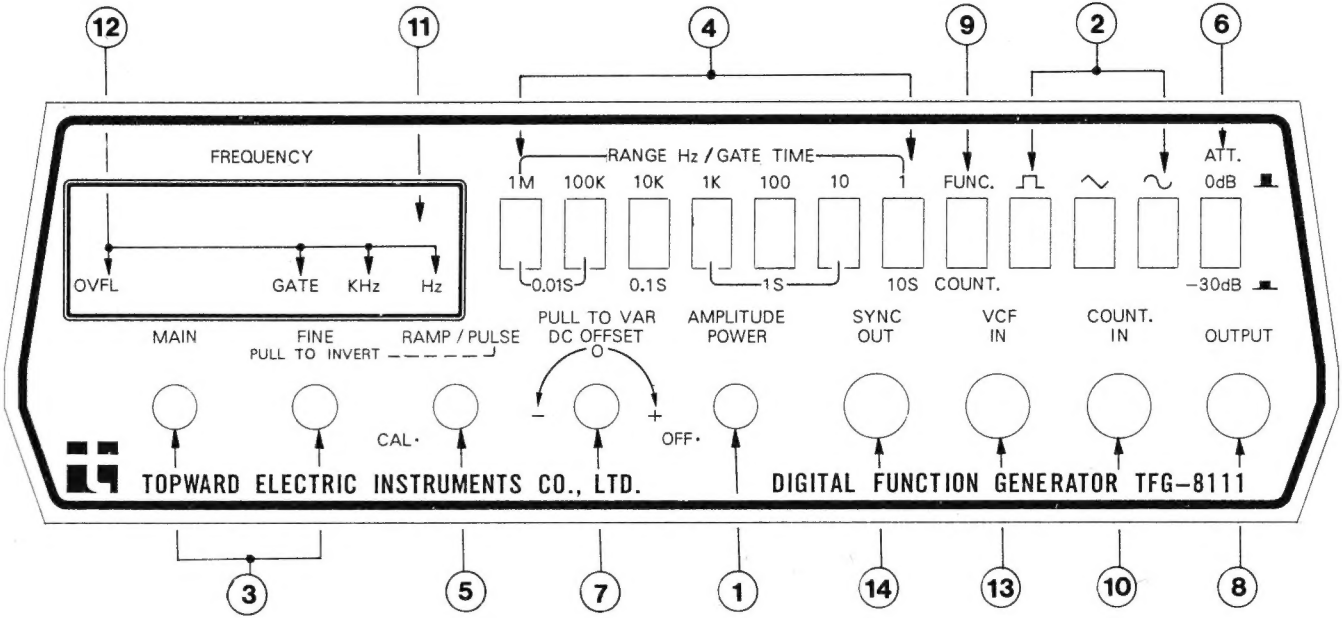

FRONT PANEL DESCRIPTION

The following is an explanation of the function of the front panel controls and connectors. Please refer to Figure 1 for location of each control/connector.

1. **POWER/AMPLITUDE** - This is the main power switch and the amplitude adjustment knob. Turning the control clockwise will increase the amplitude.

2. **FUNCTION** - This bank of switches is used to select the output waveform. Only one of these switches can be depressed at a time.

3. **FREQUENCY CONTROL** - This pair of knobs is used to adjust the output frequency. The frequency is dependent upon the setting of this pair of knobs and the **RANGE/GATE TIME** switches (4). Pulling out the **FINE** control knob (3) will invert the pulse output.

4. **RANGE/GATE TIME** - This bank of switches is used to select the frequency range produced. At the same time, the counter gate time is changed.

5. **RAMP/PULSE** - This knob is used to adjust the duty cycle of the Square or Triangle waveforms. When the knob is turned to CAL. (fully CCW position), the duty cycle is fixed at 50%. Otherwise, the duty cycle is adjustable between 5 to 95%.

6. **ATTENUATOR** - When this push button is out, the output/input signal is unchanged. If the switch is depressed, the Output/Input signal is reduced by 30 dB (Generator output / Counter input).

7. **DC OFFSET** - This knob allows a variable DC voltage between -10 V to +10 V to be added to the output signal. Note that the knob has to be pulled out for the offset to affect the signal. When the control is pushed in, no offset voltage is added.

8. **OUTPUT** - This connector provides the output signal for all waveforms.

9. **FUNC/COUNT** - When the switch is out, the 6 digits **DISPLAY** (11) shows the generator frequency. When the switch is in, the **DISPLAY** (11) shows the input frequency of counter.

10. **COUNTER IN** - This is the input connector for the 100MHz frequency counter. **FUNC/COUNT** switch (9) must be depressed.

11. **FREQUENCY DISPLAY** - This is a 6 digits LED display that shows the output frequency of the main generator or the input frequency of the counter.

12. **INDICATORS - OVFL, GATE, KHz, Hz** LEDs enunciate frequency overflow, gate time and frequency units in KHz, Hz.

13. **VCF IN** - This input is used to modulate the main frequency to 1000:1 with an external source of 0 - 5VDC.

14. **SYNC OUT** - This connector supplies a TTL compatible output signal which is unaffected by either the **FUNCTION** (2) or **AMPLITUDE** (1) controls. The output frequency is the same as that of **OUTPUT** signal (8).

OPERATING INSTRUCTIONS

1. **Instrument Turn-on**

   WARNING: Before applying power to your TFG-8111, make sure that the input voltage is set to your power source.

   A. Connect the TFG-8111 to an AC power source and turn on the **POWER** switch (1).

2. **Main Generator**

   A. Select the desired waveform using the **FUNCTION** switch (2). To generate a ramp or pulse output, turn on the **RAMP/PULSE** knob (5) and set the desired duty cycle.

   B. Set the desired frequency with the **FREQUENCY** control (3) and the **RANGE** switches (4).

   C. Adjust the output amplitude with the **AMPLITUDE** control (1) to the desired level. If a very small signal is required, depress the **ATTENUATOR** switch (6).

   D. Set DC Offset voltage with the **DC OFFSET** control (7).

   E. Use the **SYNC** output terminal (14) if TTL compatible level is required.

F. Pull out the **INVERT** switch (3) to introduce a 180 degree phase shift.

3. **Voltage Controlled Frequency**
   A. Supply a trim voltage between 0 and 5 VDC to the **VCF IN** terminal (13). The main frequency will be varied over 1000:1.

4. **Frequency Counter**
   A. Push in the **FUNC/COUNT** switch (9).

   B. Apply input signal to **COUNT IN** (10).

   C. Select **GATE TIME** (4) for best resolution.

   D. Use **ATTANUATOR** (6) for large input signal to avoid damage to the instrument.

OPERATING CAUTIONS

To assure operation within the published specifications, allow the unit to warm up and stabilize for at least 20 minutes.

Failure to observe the operating procedure listed below will result in damage to the unit and void your warranty.

Do not supply more than 10 Volts (AC + DC) into:

Output terminal (8)
VCF IN terminal (13)
SYNC terminal (14)

THEORY OF OPERATION

Counter Section

1. **Counter Amplifier (refer to circuit diagram sheet 1)**

   A. The buffer amplifier (Q3 and Q4) make up the impedance buffer circuit.

   B. U5A-U5C form a secondary high voltage gain stage. Q5 and Q6 form a level shifter.

2. **Counter Control Circuit (refer to circuit diagram sheet 4)**

   A. U14 (7216D) is a single chip counter IC. U13 and CR38-CR43 form a gate time selecting circuit.

   B. CR44-CR54 form a decimal point selecting circuit and Hz, KHz indicating circuit.

   C. U16A-U16D form a generator frequency display / counter input frequency display selecting circuit.

   D. U15 is a divide-by-ten IC, use for the high frequency input measurement.

Generator Section

1. **Tuning Amplifier, Summing Amplifier and Constant Current Source (refer to circuit diagram sheet 2)**

A. The tuning amplifier is a non-inverting input amplifier (U8A), providing a fixed voltage for frequency control **MAIN** and **FINE** (3). U8B is a voltage buffer IC, buffering the variable control voltage of frequency control **MAIN** and **FINE** (3).

B. The summing amplifier (U6 and Q7) sums each current from the VCF input and the tuning amplifier output. The output voltage of the amplifier is a weighted average of the input signal voltages. The frequency control **MAIN** and **FINE** (3) varies the amount of voltage which determines the generator output frequency.

C. U7 and Q8 generate equalizing positive and negative voltages for the current source circuit. The current source circuit includes positive current source (U9 and Q9) and negative current source (U10 and Q10). The positive and negative current values are determined by frequency control **MAIN** and **FINE** (3).

2. **Triangle Generator and Comparator (refer to circuit diagram sheet 2)**

The triangle waveform from the triangle generator is apply to the voltage comparator which acts as an amplitude limiter. As the triangle waveform alternately crosses the upper and lower switching levels (refer to R47-R50) of the limiter input, a square wave is generated at the output of the voltage comparator (U11). The square is feedback to the triangle generator where it controls the charge / discharge cycle of the triangle output.

3. **Sine Shaper and PRE-Amplifier (refer to circuit diagram sheet 3)**
   A. To obtain a sine wave. The triangle wave is shaped by a diode network (CR16 - CR31), in the sine shapper. There are four-stage diodes network serves as a non-linear load which varies the attenuation of the input triangle according to its level.

   B. The PRE-Amplifier is a non-inverting closed loop amplifier. Q15 and Q16 form the differential input stage that provides DC stability. Q17 forms the second gain stage. Q18 and Q19 are the output buffer circuit.

4. **Output Amplifier (refer to circuit diagram sheet 3)**
   The output amplifier works the same manner as PRE-Amplifier, and provides a 50 ohms low output impedance for **OUTPUT** terminal (8).

CALIBRATION

CAUTIONS: Services performed by unauthorized person will void your warranty.

To assure the most stable operation possible, your Model TFG-8111 should be periodically adjusted. To perform the following adjustment procedures, you will need a Phillips screwdriver, Timer/Counter, Voltmeter, an Oscilloscope (50MHz minimum), Distortion meter, and high frequency (up to 100MHz) signal generator. Calibration be performed under liboratory conditions having an ambient temperature of 18° to 28°C(62° to 82°F), and relative humidity of less then 80%. As you perform this procedure, please refer to the adjustment location drawing.

1. Set the TFG-8111 controls as follows:

RANGE (4)	1K
FUNCTION (2)	∿
DC OFFSET (7)	OFF
AMPLITUDE (1)	CW (Max.)
RAMP/PULSE (5)	CCW (CAL)
FREQUENCY MAIN & FINE (3)	CW (Max.)

2. Connector **OUTPUT** (8) on Counter TFC-1201 (or equivalent), adjust R127 (2MHz ADJ) to display 2.3KHz ± 50Hz.

3. Select **RANGE**(4) to 1 K and **FUNCTION** (2) to SINE. Set the **FREQUENCY MAIN & FINE** (3) to read 1KHz on TFC-1201. Connect the **OUTPUT** (8) to a distortion meter TDA-710 (or equivalent). Adjust R130 (SINE DIST1), R131 (SINE DIST2) for minimum distortion.

4. Select **FUNCTION** (2) to TRIANGLE. Turn the **AMPLITUDE** (1) to mid location. Connect the output to an voltmeter. Adjust R135 (PA DC) to be DC ± 10mV. Turn the **AMPLITUDE** (1) to maximum location. Connect the **OUTPUT** (8) to an oscilloscope. Adjust R134 (TRI AMPL) to let the Vp-p of triangle wave be 20.8V ± 0.2V.

5. Select **FUNCTION** (2) to SINE. Adjust R132 (SINE DC) to let DC offset be DC 0V ± 10mV. Adjust R133 (SINE AMPL) to let the Vp-p of sine wave be 20.8V ± 0.2V.

6. Select **FUNCTION** (2) to SQUARE. Adjust R128 to let the upper level of square wave be +10.4V ± 0.1V. Adjust R129 to let the lower level of square wave be -10.4V ± 0.1V.

7. Press the **FUNC/COUNT** switch (9) in. Connect a 10MHz ± 1PPM standard frequency to the **COUNTER** input (10). Adjust trimmer capacitor C2 until the display reads 000.000 KHz ± 1 digits (Hz). (with OVFL LED lit). Set the **RANGE** switch (4) to 1 MHz. Apply a 100MHz 50mV signal to **COUNT** input (10). Adjust trimmer resistor R126 to let the display be stable.

TROUBLESHOOTING

If you are experiencing trouble with your Model TFG-8111 Digital Function Generator, follow the procedures below to find and correct the problem.

1. Power Supply

   A. Varify that the voltage selector switch (S1) is set correctly (115V or 230V) for your available power.

   B. Turn the **POWER** (1) on and using an voltmeter measure the voltages at the following points:

U3	pin 1	+ 9V ± 10%
U1	pin 1	+23V ± 10%
Q1	Collector.....	-23V ± 10%

   If not, check and repair the components from the line cord to test points.

   C. Measure the voltages at the following points:

U3	pin 3	+ 5V ± 5%
U1	pin 3	+15V ± 5%
Q1	Emitter	-15V ± 5%
Q2	Emitter	- 5V ± 5%

U2 pin 3 ..... + 5V ± 5%

If not, check and repair the components of U1, U2, U3, U4, Q1 and Q2.

2. Counter Amplifier

Set the **RANGE** switch (4) to 1M. Push **FUNC/COUNT** (9) in and the **DISPLAY** (11) will blank out. Apply a 1MHz 25mV signal to **COUNTER INPUT** (10). Using an oscilloscope, trace this signal at the following points:

Q3	source	1 MHz	∿	55mVp-p ± 20%
Q4	collector	1 MHz	∿	150mVp-p ± 20%
U5	pin 7	1 MHz	∿	750mVp-p ± 20%
	pin 2	1 MHz	⎍	1 Vp-p ± 20%
	pin15	1 MHz	⎍	1 Vp-p ± 20%
Q6	collector	1 MHz	⎍	1.8 Vp-p ± 20%
U16	pin 3	1 MHz	⎍	1.8 Vp-p ± 20%
	pin 1	1 MHz	⎍	3 Vp-p ± 20%
	pin 4	1 MHz	⎍	3.5 Vp-p ± 20%

If not, check and repair the components of Q3, Q4, Q5, Q6 and U16.

3. Counter Control Circuit

Refer to circuit diagram sheet 4.

The counters gate time were selected by **RANGE/GATE** switches (4). If there occurrs functional error, check and repair U13, U14 or nearby components.

4. **Tuning Amplifier and Constant Current Source**

A. Turn the frequency control **MAIN** and **FINE** (3) to CCW (minimum) position. Check the voltage ratings of the following points:

U8	pin7	+10V ± 10%
U8	pin1	0V ± 10mV
U7	pin3	-15V (equals to -Vcc)
U9	pin2	+15V (equals to +Vcc)
U10	pin2	-15V (equals to -Vcc)

B. Turn the frequency control **MAIN** and **FINE** (3) to CW (maximum) position. Check the voltage ratings of the following points:

U8	pin7	+10V ± 10%
U8	pin1	+10V ± 10%
U7	pin3	- 5V ± 10%
U9	pin2	+ 5V ± 10%
U10	pin2	- 5V ± 10%

If not, check and repair the components of U8, U6, Q7, U7, Q8, U9, U10, Q9 and Q10.

5. **Triangle Buffer and Comparator**

Set the **RANGE** switch (4) to 1 KHz. Turn the **AMPLITUDE** (1) to CW location.

Check and be sure that the waveform and voltage of the following points:

Q13	Base	∿	2Vp-p ± 10%
U11	pin4	⎍	4.5Vp-p ± 10%
	pin9	⎍	3.5Vp-p ± 10%

If not, check and repair Q11, Q13, Q14 and U11.

6. **Sine Shaper and PRE Amplifier**

Check and be sure that the waveform and voltage of the following points:

TP1	.....	∿	2Vp-p ± 10%
Q15	Base	∿	0.6Vp-p ± 10%
R87	(each side)	∿	2Vp-p ± 10%

If not, check and repair CR16 to CR31 or Q15 to Q19.

7. **Power Amplifier**

Set the **FUNCTION** switch (2) to sine wave. Check and be sure the waveform and voltage of the following points:

Q20	Base	∿	2Vp-p ± 10%
R103	(each side)	∿	20.8Vp-p ± 10%

If not, check and repair Q20 to Q24.

REVISION	DATE

ADJUSTMENT LOCATION

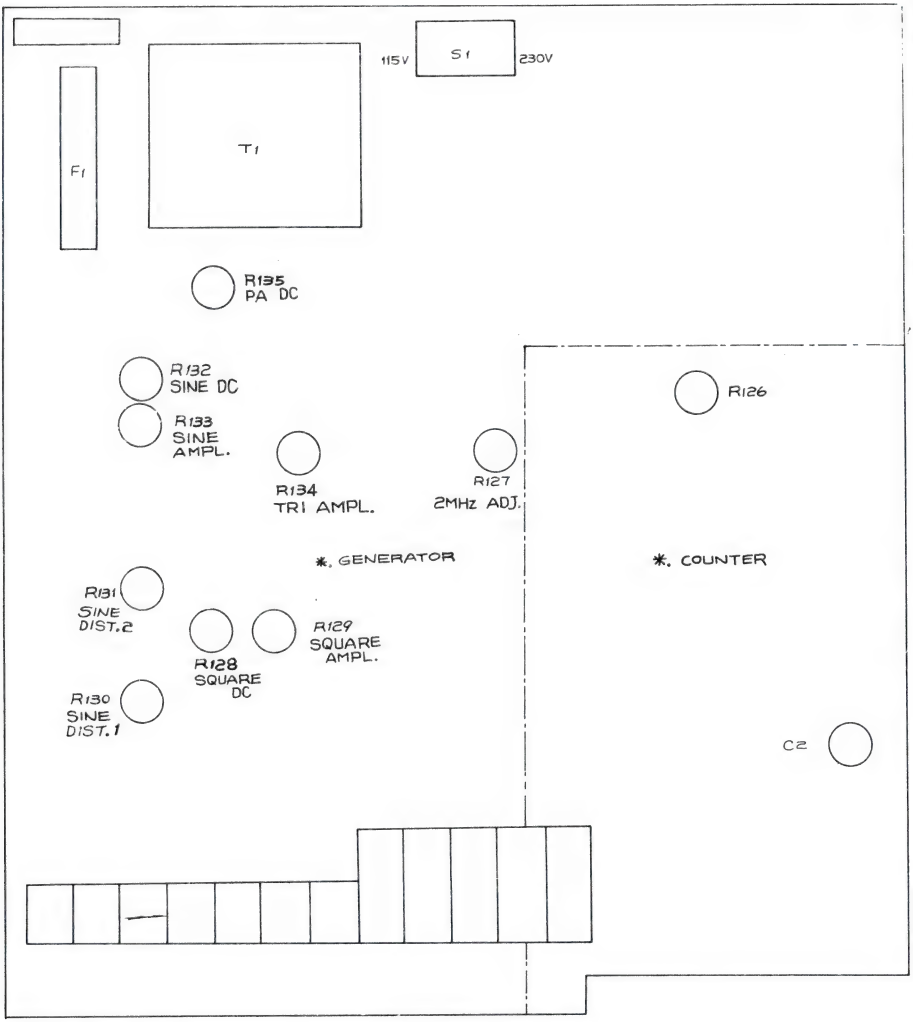

DO NOT SCALE THIS DRAWING	TOLERANCE UNLESS SPECIFIER ARE ANGLES DECIMALS	TFG-8111 ADJUSTMENT LOCATION
TOPWARD ELECTRIC INSTRUMENTS CO., LTD	DRAFTER B.J. Hwang	DRAWING NO: DESIGNER / APPROVED

BLOCK DIAGRAM

REVISION	DATE

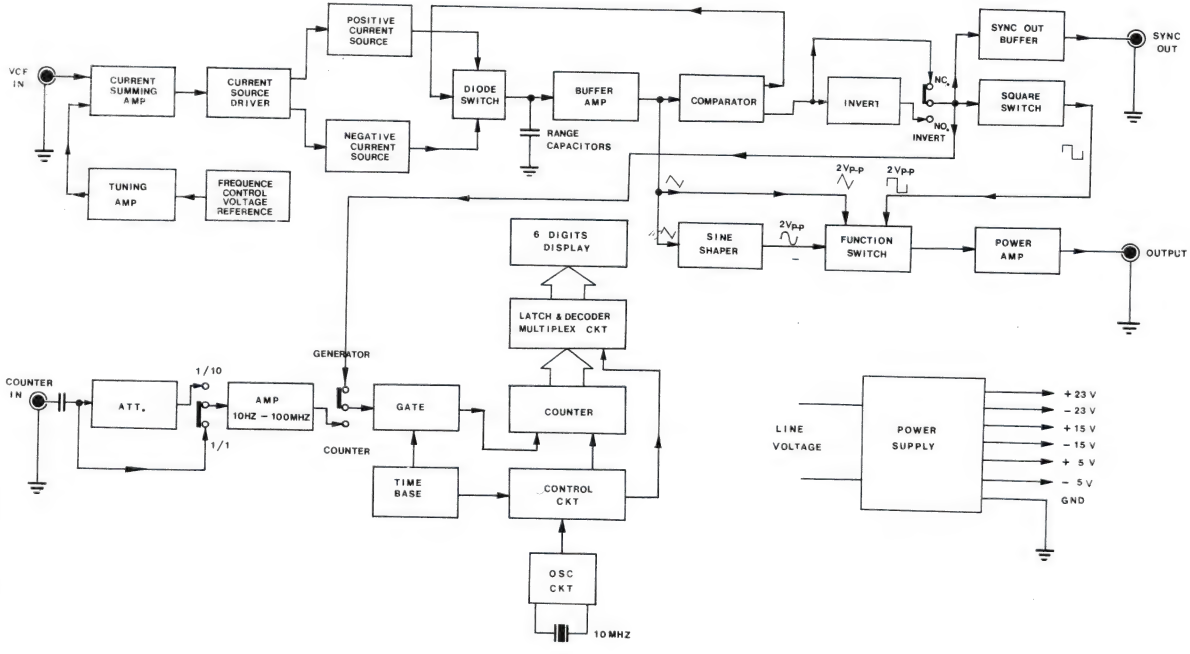

DO NOT SCALE THIS DRAWING	TOLERANCE UNLESS SPECIFIER ARE ANGLES ± DECIMALS ±	TFG-8111 BLOCK DIAGRAM
TOPWARD ELECTRIC INSTRUMENTS CO., LTD.	DRAFTER	DRAWING NO:
	DESIGNER S. mon Wang	APPROVED Simon Wang

CIRCUIT DIAGRAM

REVISION	DATE

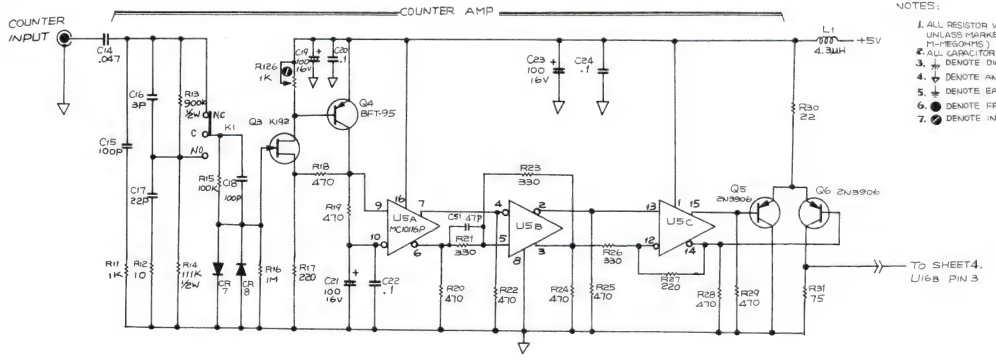

DO NOT SCALE THIS DRAWING	TOLERANCE UNLESS SPECIFIER ARE ANGLES ± DECIMALS ±	TFG-8111 CIRCUIT DIAGRAM SHEET 1.
TOPWARD ELECTRIC INSTRUMENTS CO., LTD.	DRAFTER	DRAWING NO: DESIGNER Simon Wang APPROVED Simon Wang

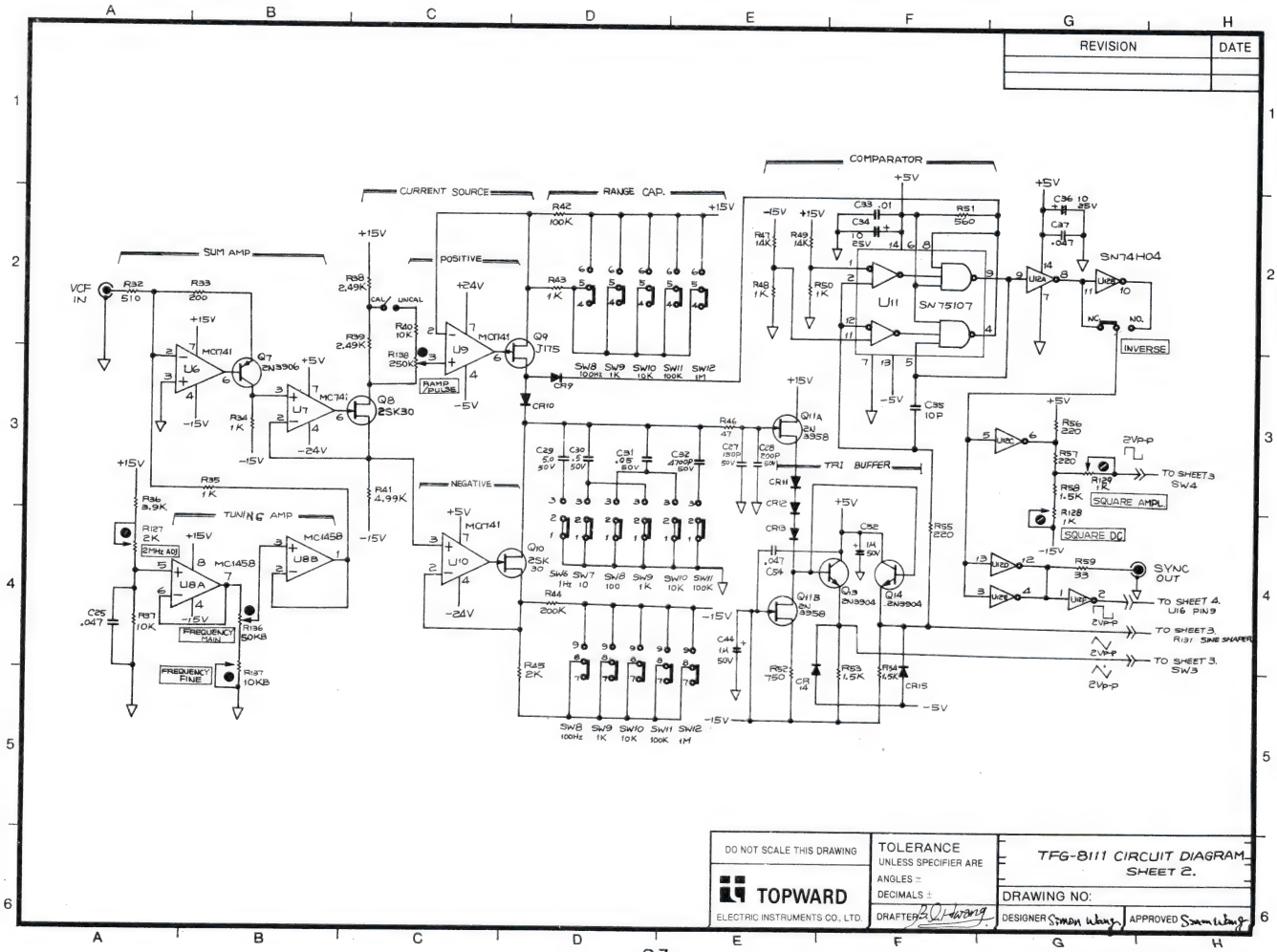
REVISION
DATE
SUM AMP
CURRENT SOURCE
RANGE CAP.
COMPARATOR
POSITIVE
NEGATIVE
TUNING AMP
TRI BUFFER
VCF IN
U6 MC1741
Q7 2N3906
U7 MC1741
Q8 2SK30
U9 MC1741
Q9 J175
U10 MC1741
Q10 2SK30
U8A MC1458
U8B MC1458
U11 SN75107
SN74H04
U12A
U12B
U12C
U12D
U12E
U12F
Q11A 2N3958
Q11B 2N3958
Q13 2N3904
Q14 2N3904
CAL/UNCAL
RAMP/PULSE
FREQUENCY MAIN
FREQUENCY FINE
2MHz ADJ
INVERSE
NC
NO.
SQUARE AMPL.
SQUARE DC
SYNC OUT
TO SHEET 3 SW4
TO SHEET 4. U16 PIN9
TO SHEET 3. R131 SINE SHAPER
TO SHEET 3. SW3
2Vp-p
+15V
-15V
+5V
-5V
+24V
-24V
SW8 100Hz
SW9 1K
SW10 10K
SW11 100K
SW12 1M
SW6 1Hz
SW7 10
SW8 100
SW9 1K
SW10 10K
SW11 100K
SW12 1M
R32 510
R33 200
R34 1K
R35 1K
R36 3.9K
R37 10K
R38 2.49K
R39 2.49K
R40 10K
R41 4.99K
R42 100K
R43 1K
R44 200K
R45 2K
R46 47
R47 14K
R48 1K
R49 14K
R50 1K
R51 560
R52 750
R53 1.5K
R54 1.5K
R55 220
R56 220
R57 220
R58 1.5K
R59 33
R127 2K
R128 1K
R129 1K
R130 50KB
R131 10KB
C25 .047
C27 150P 50V
C28 200P 50V
C29 5.0 50V
C30 .5 50V
C31 .05 50V
C32 4700P 50V
C33 .01
C34 10 25V
C35 10P
C36 10 25V
C37 .047
C44 1M 50V
C52 1M 50V
C54 .047
CR9
CR10
CR11
CR12
CR13
CR14
CR15
DO NOT SCALE THIS DRAWING
TOPWARD
ELECTRIC INSTRUMENTS CO., LTD.
TOLERANCE
UNLESS SPECIFIER ARE
ANGLES ±
DECIMALS ±
DRAFTER
TFG-8111 CIRCUIT DIAGRAM
SHEET 2.
DRAWING NO:
DESIGNER Simon Wang
APPROVED Simon Wang

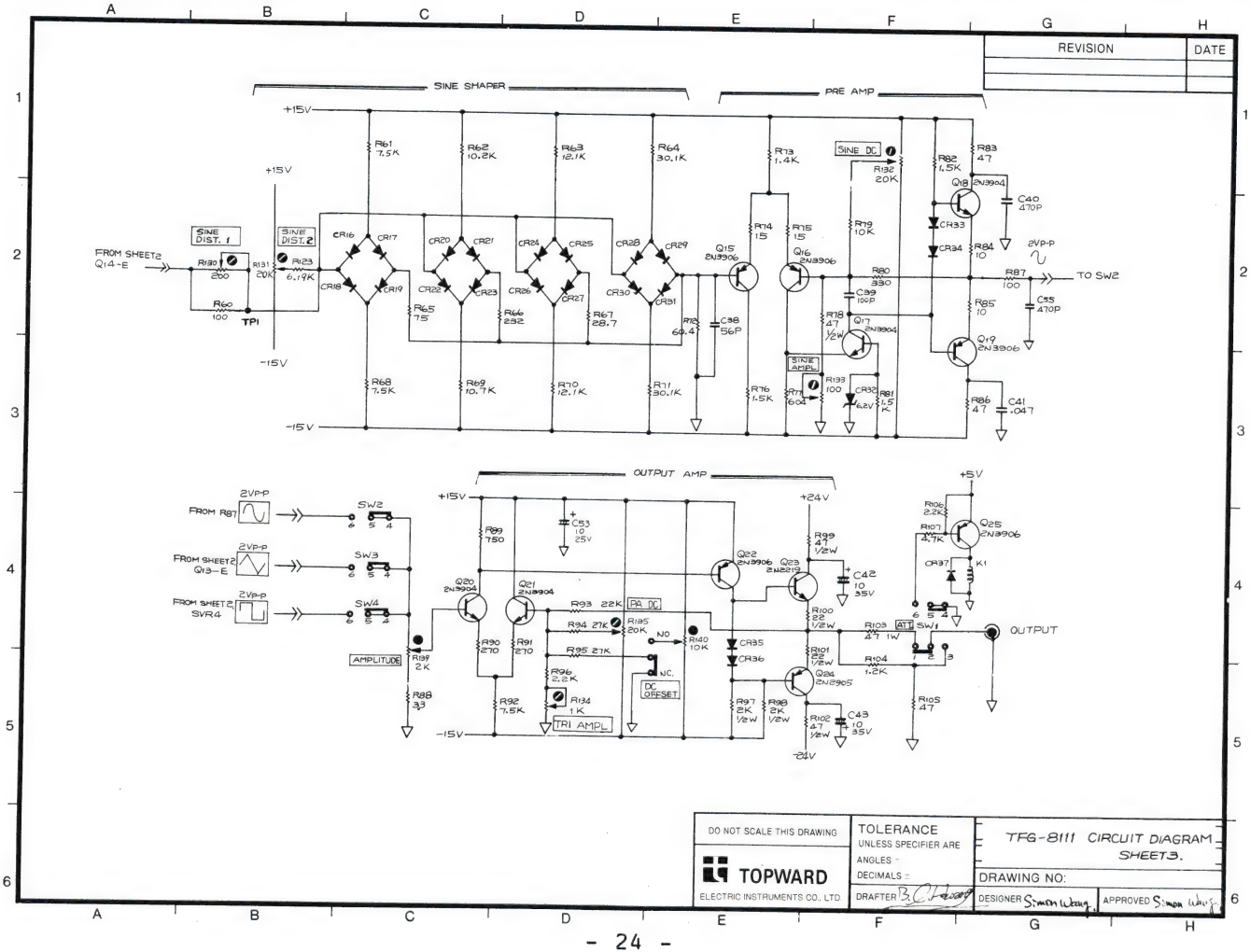
REVISION
DATE
SINE SHAPER
PRE AMP
OUTPUT AMP
+15V
-15V
+24V
+5V
FROM SHEET2 Q14-E
SINE DIST. 1
SINE DIST. 2
TP1
TO SW2
2VP-P
FROM R87
FROM SHEET2 Q13-E
FROM SHEET2 SVR4
SW2
SW3
SW4
AMPLITUDE
PA DC
DC OFFSET
TRI AMPL
ATT
SW1
OUTPUT
SINE DC
SINE AMPL
DO NOT SCALE THIS DRAWING
TOPWARD
ELECTRIC INSTRUMENTS CO., LTD.
TOLERANCE
UNLESS SPECIFIER ARE
ANGLES ±
DECIMALS ±
DRAFTER
TFG-8111 CIRCUIT DIAGRAM SHEET3.
DRAWING NO:
DESIGNER Simon Wang
APPROVED Simon Wang

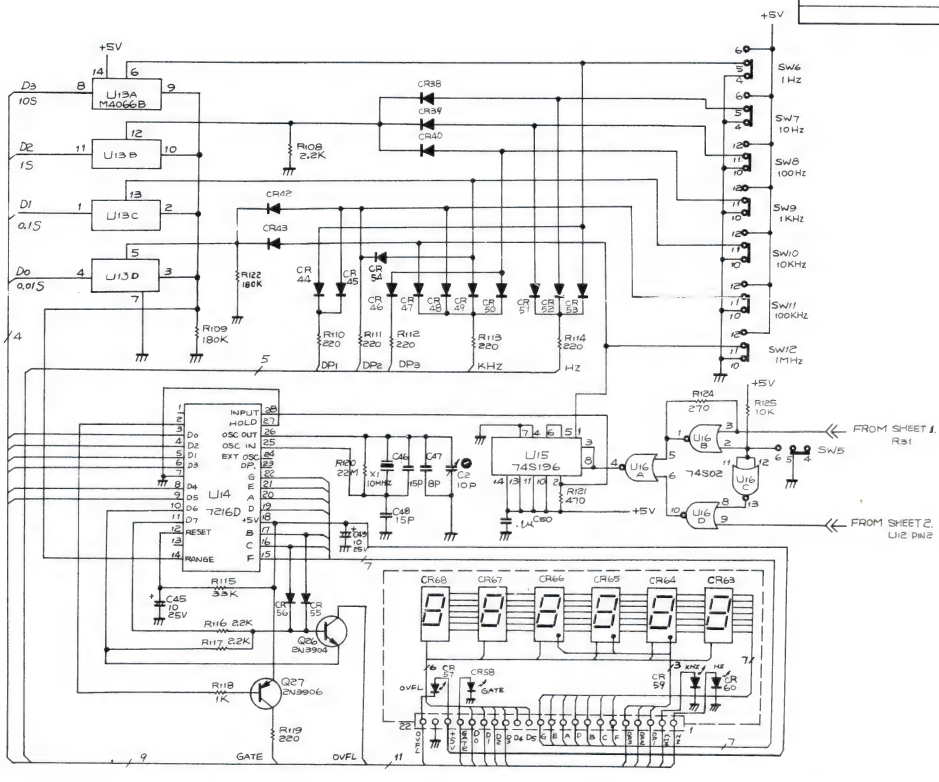

REVISION	DATE

DO NOT SCALE THIS DRAWING

TOPWARD
ELECTRIC INSTRUMENTS CO., LTD

TOLERANCE
UNLESS SPECIFIER ARE
ANGLES :
DECIMALS :

TFG-8111 CIRCUIT DIAGRAM
SHEET 4.

DRAWING NO:

DRAFTER B. Wang

DESIGNER Simon Wang

APPROVED Simon Wang

REVISION	DATE

COMPONENT LAYOUT

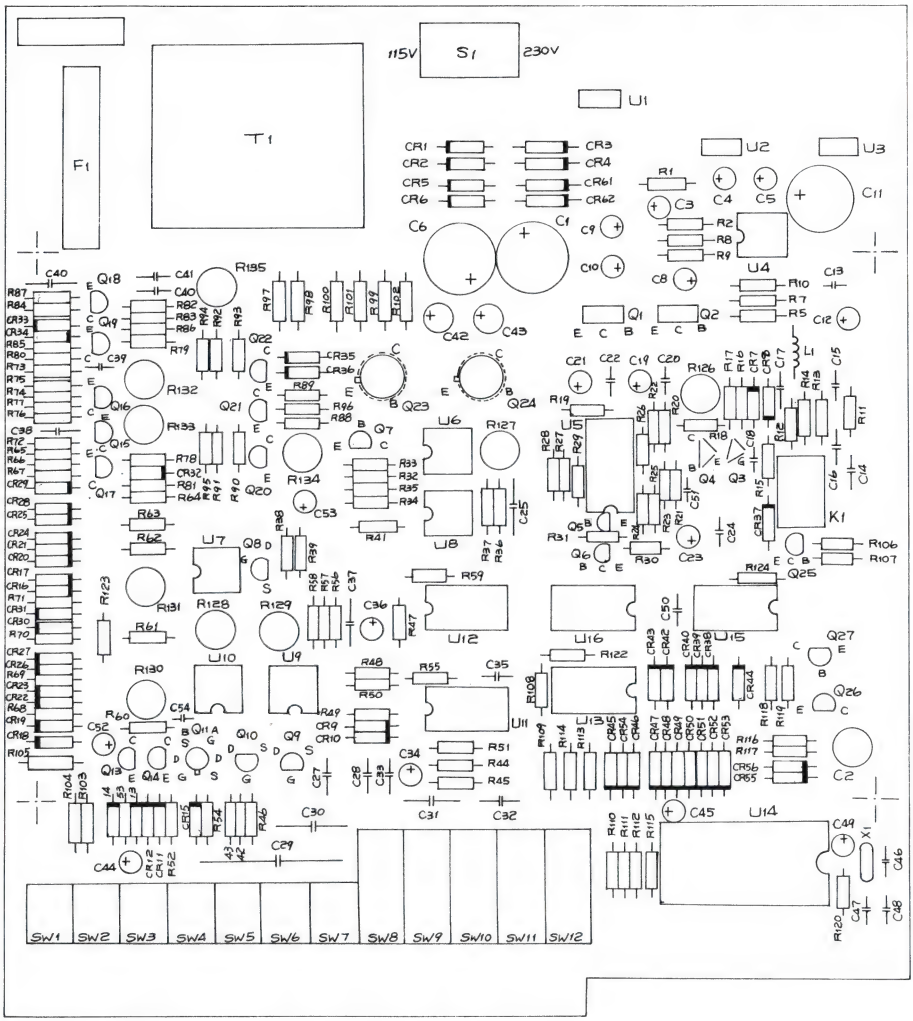

DO NOT SCALE THIS DRAWING	TOLERANCE UNLESS SPECIFIER ARE ANGLES : DECIMALS :	TFG-8111 COMPONENT LAYOUT
TOPWARD ELECTRIC INSTRUMENTS CO., LTD.	DRAFTER	DRAWING NO: DESIGNER Simon Wang / APPROVED Simon Wang

SPECIFICATIONS

GENERATOR

Waveforms:	Sine, Square, Triangle, Pulse, Ramp
Frequency:	0.1Hz - 2MHz, 7 Ranges
Display:	6 Digits with Hz, KHz, Gate, OVFL
Freq. Error:	Counter Accuracy
Output Impedance:	50 Ω ±10%
Output Level:	5mVp-p (min) to 20Vp-p Continuously Variable (open circuit)
Attenuator:	0dB, -30dB
DC Offset:	±10 Volts Continuously Variable (open circuit)
Duty Cycle:	5% - 95% Continuously Variable with 50% Calibrated Switch
Distortion:	<1%, 1Hz - 100KHz
Triangle Linearity	<1%, 1Hz - 100KHz
Rise/Fall Time:	<100nS
Sync Out:	3Vp-p (open circuit), Tr < 25nS
VCF in:	0 - 5 Vdc Control Frequency to 1000:1

..... continue .....

COUNTER

Range:	10Hz - 100MHz
Gate Time:	0.01S, 0.1S, 1S, 10S Controlled by Range switch
Accuracy:	±(1 Count + Time Base Accuracy)
Sensitivity:	25mVrms(10Hz - 10MHz), 50mVrms(10Hz - 100MHz)
Attenuator:	0dB, -30dB
Max. Allowable Input:	150Vrms(DC + Peak AC)
Impedance:	1MΩ // 100pF
Time Base:	10MHz, ±10ppm (0°C - 40°C)
Display:	6 digits 7 segment LED display. LED Indicators for Gate, Overflow, Hz, KHz

GENERAL

Dimension:	233(W) x 80(H) x 300(D) mm
Weight:	1.6Kg
Power:	115V/230V ±10%, 50/60Hz, 12VA
Accessory:	Test Lead - ACS-003 BNC to Alligator Clip Cable 1 pcs

PARTS LIST

DESIGNATION	DESCRIPTION				
(600053001)					
C	1	CAP	ELEC	1000UF	35V +80%-20%
C	2	CAP	CER SVC	10PF	+-10%
C	3	CAP	ELEC	47UF	25V +80%-20%
C	4	CAP	ELEC	47UF	25V +80%-20%
C	5	CAP	ELEC	47UF	25V +80%-20%
C	6	CAP	ELEC	1000UF	35V +80%-20%
C	8	CAP	ELEC	47UF	25V +80%-20%
C	9	CAP	ELEC	470UF	16V +80%-20%
C	10	CAP	ELEC	47UF	16V +80%-20%
C	11	CAP	ELEC	4700UF	16V +80%-20%
C	12	CAP	ELEC	47UF	16V +80%-20%
C	13	CAP	CER	.047UF	50V +-10%
C	14	CAP	CER	.047UF	500V +-10%
C	15	CAP	CER	100PF	50V +-10%
C	16	CAP	CER	3PF	50V +-10%
C	17	CAP	CER	22PF	50V +-10%
C	18	CAP	CER	100PF	50V +-10%
C	19	CAP	ELEC	100UF	16V +80%-20%
C	20	CAP	CER	.1UF	50V +-10%
C	21	CAP	ELEC	100UF	16V +80%-20%
C	22	CAP	CER	.1UF	50V +-10%
C	23	CAP	ELEC	100UF	16V +80%-20%

DESIGNATION		DESCRIPTION				
C	24	CAP	CER	.1UF	50V	+-10%
C	25	CAP	CER	.047UF	50V	+-10%
C	27	CAP	PE	150PF	50V	+-5%
C	28	CAP	PE	200PF	50V	+-5%
C	29	CAP	MF	5.0UF	50V	+-5%
C	30	CAP	MF	.5UF	50V	+-5%
C	31	CAP	MF	.05UF	50V	+-5%
C	32	CAP	MYLAR	.0047UF	50V	+-5%
C	33	CAP	CER	.01UF	50V	+-10%
C	34	CAP	ELEC	10UF	25V	+80%-20%
C	35	CAP	CER	10PF	50V	+-10%
C	36	CAP	ELEC	10UF	25V	+80%-20%
C	37	CAP	CER	.047UF	50V	+-10%
C	38	CAP	CER	56PF	50V	+-10%
C	39	CAP	CER	100PF	50V	+-10%
C	40	CAP	CER	470PF	50V	+-10%
C	41	CAP	CER	.047UF	50V	+-10%
C	42	CAP	ELEC	10UF	35V	+80%-20%
C	43	CAP	ELEC	10UF	35V	+80%-20%
C	44	CAP	ELEC	1UF	50V	+80%-20%
C	45	CAP	ELEC	10UF	25V	+80%-20%
C	46	CAP	CER NPO	15PF	50V	+-10%
C	47	CAP	CER NPO	8PF	50V	+-10%

DESIGNATION		DESCRIPTION				
C	48	CAP	CER NPO	15PF	50V	+-10%
C	49	CAP	ELEC	10UF	25V	+80%-20%
C	50	CAP	CER	.1UF	50V	+-10%
C	51	CAP	CER	47UF	50V	+-10%
C	52	CAP	ELEC	1UF	50V	+80%-20%
C	53	CAP	ELEC	10UF	25V	+-10%
C	54	CAP	CER	.047UF	50V	+-10%
CR	1	DIODE	1N4003			
CR	2	DIODE	1N4003			
CR	3	DIODE	1N4003			
CR	4	DIODE	1N4003			
CR	5	DIODE	1N4003			
CR	6	DIODE	1N4003			
CR	7	DIODE	1N4148			
CR	8	DIODE	1N4148			
CR	9	DIODE	1N4148			
CR	10	DIODE	1N4148			
CR	11	DIODE	1N4148			
CR	12	DIODE	1N4148			
CR	13	DIODE	1N4148			
CR	14	DIODE	1N4148			
CR	15	DIODE	1N4148			

DESIGNATION	DESCRIPTION
CR 16	DIODE 1N4148
CR 17	DIODE 1N4148
CR 18	DIODE 1N4148
CR 19	DIODE 1N4148
CR 20	DIODE 1N4148
CR 21	DIODE 1N4148
CR 22	DIODE 1N4148
CR 23	DIODE 1N4148
CR 24	DIODE 1N4148
CR 25	DIODE 1N4148
CR 26	DIODE 1N4148
CR 27	DIODE 1N4148
CR 28	DIODE 1N4148
CR 29	DIODE 1N4148
CR 30	DIODE 1N4148
CR 31	DIODE 1N4148
CR 32	ZENER DIODE 6.2V 0.5W
CR 33	DIODE 1N4148
CR 34	DIODE 1N4148
CR 35	DIODE 1N4148
CR 36	DIODE 1N4148
CR 37	DIODE 1N4148
CR 38	DIODE 1N4148

DESIGNATION		DESCRIPTION
CR	39	DIODE 1N4148
CR	40	DIODE 1N4148
CR	42	DIODE 1N4148
CR	43	DIODE 1N4148
CR	44	DIODE 1N4148
CR	45	DIODE 1N4148
CR	46	DIODE 1N4148
CR	47	DIODE 1N4148
CR	48	DIODE 1N4148
CR	49	DIODE 1N4148
CR	50	DIODE 1N4148
CR	51	DIODE 1N4148
CR	52	DIODE 1N4148
CR	53	DIODE 1N4148
CR	54	DIODE 1N4148
CR	55	DIODE 1N4148
CR	56	DIODE 1N4148
K	1	RELAY MZ-9HS-TYPE 9V
L	1	INDUCTOR (T) 4.3UH
Q	1	TRANS A699

DESIGNATION		DESCRIPTION
Q	2	TRANS A699
Q	3	TRANS FET 2SK192
Q	4	TRANS BFT-95
Q	5	TRANS 2N3906
Q	6	TRANS 2N3906
Q	7	TRANS 2N3906
Q	8	TRANS FET 2SK30
Q	9	TRANS FET J175
Q	10	TRANS FET 2SK30
Q	11A	TRANS FET 2N3958
Q	11B	TRANS FET 2N3958
Q	13	TRANS 2N3904
Q	14	TRANS 2N3904
Q	15	TRANS 2N3906
Q	16	TRANS 2N3906
Q	17	TRANS 2N3904
Q	18	TRANS 2N3904
Q	19	TRANS 2N3906
Q	20	TRANS 2N3904
Q	21	TRANS 2N3904
Q	22	TRANS 2N3906
Q	23	TRANS 2N2219
Q	24	TRANS 2N2905

DESIGNATION		DESCRIPTION				
Q	25	TRANS	2N3906			
Q	26	TRANS	2N3904			
Q	27	TRANS	2N3906			
R	1	RES	CARBON	22	OHM	+-5% 1/2W
R	2	RES	MF	10K		+-1% 1/4W
R	3	RES	CARBON	47	OHM	+-5% 1/2W
R	4	RES	CARBON	47	OHM	+-5% 1/2W
R	5	RES	CARBON	910	OHM	+-5% 1/4W
R	6	RES	CARBON	100	OHM	+-5% 1/2W
R	7	RES	CARBON	1K		+-5% 1/4W
R	8	RES	MF	10K		+-1% 1/4W
R	9	RES	MF	10K		+-1% 1/4W
R	10	RES	MF	10K		+-1% 1/4W
R	11	RES	CARBON	1K		+-5% 1/4W
R	12	RES	CARBON	10	OHM	+-5% 1/4W
R	13	RES	MF	900K		+-1% 1/2W
R	14	RES	MF	111K		+-1% 1/2W
R	15	RES	CARBON	100K		+-5% 1/4W
R	16	RES	CARBON	1M		+-5% 1/4W
R	17	RES	CARBON	220	OHM	+-5% 1/4W
R	18	RES	CARBON	470	OHM	+-5% 1/4W
R	19	RES	CARBON	470	OHM	+-5% 1/4W

DESIGNATION		DESCRIPTION			
R	20	RES	CARBON	470	OHM +-5% 1/4W
R	21	RES	CARBON	330	OHM +-5% 1/4W
R	22	RES	CARBON	470	OHM +-5% 1/4W
R	23	RES	CARBON	330	OHM +-5% 1/4W
R	24	RES	CARBON	470	OHM +-5% 1/4W
R	25	RES	CARBON	470	OHM +-5% 1/4W
R	26	RES	CARBON	330	OHM +-5% 1/4W
R	27	RES	CARBON	220	OHM +-5% 1/4W
R	28	RES	CARBON	470	OHM +-5% 1/4W
R	29	RES	CARBON	470	OHM +-5% 1/4W
R	30	RES	CARBON	22	OHM +-5% 1/4W
R	31	RES	CARBON	75	OHM +-5% 1/4W
R	32	RES	CARBON	510	OHM +-5% 1/4W
R	33	RES	MF	200	OHM +-1% 1/4W
R	34	RES	MF	1K	+-1% 1/4W
R	35	RES	CARBON	1K	+-5% 1/4W
R	36	RES	CARBON	3.9K	+-5% 1/4W
R	37	RES	CARBON	10K	+-5% 1/4W
R	38	RES	MF	2.49K	+-1% 1/4W
R	39	RES	MF	2.49K	+-1% 1/4W
R	40	RES	CARBON	10K	+-5% 1/4W
R	41	RES	MF	4.99K	+-1% 1/4W
R	42	RES	MF	100K	+-1% 1/4W

DESIGNATION		DESCRIPTION				
R	43	RES	MF	1K		+-1% 1/4W
R	44	RES	MF	200K		+-1% 1/4W
R	45	RES	MF	2K		+-1% 1/4W
R	46	RES	CARBON	47	OHM	+-5% 1/4W
R	47	RES	MF	14K		+-1% 1/4W
R	48	RES	MF	1K		+-1% 1/4W
R	49	RES	MF	14K		+-1% 1/4W
R	50	RES	MF	1K		+-1% 1/4W
R	51	RES	CARBON	560	OHM	+-5% 1/4W
R	52	RES	CARBON	750	OHM	+-5% 1/4W
R	53	RES	CARBON	1.5K		+-5% 1/4W
R	54	RES	CARBON	1.5K		+-5% 1/4W
R	55	RES	CARBON	220	OHM	+-5% 1/4W
R	56	RES	CARBON	220	OHM	+-5% 1/4W
R	57	RES	CARBON	220	OHM	+-5% 1/4W
R	58	RES	CARBON	1.5K		+-5% 1/4W
R	59	RES	CARBON	33	OHM	+-5% 1/4W
R	60	RES	CARBON	100	OHM	+-5% 1/4W
R	61	RES	MF	7.5K		+-1% 1/4W
R	62	RES	MF	10.2K		+-1% 1/4W
R	63	RES	MF	12.1K		+-1% 1/4W
R	64	RES	MF	30.1K		+-1% 1/4W
R	65	RES	MF	75	OHM	+-1% 1/4W

DESIGNATION		DESCRIPTION				
R	66	RES	MF	232	OHM	+-1% 1/4W
R	67	RES	MF	28.7	OHM	+-1% 1/4W
R	68	RES	MF	7.5K		+-1% 1/4W
R	69	RES	MF	10.7K		+-1% 1/4W
R	70	RES	MF	12.1K		+-1% 1/4W
R	71	RES	MF	30.1K		+-1% 1/4W
R	72	RES	MF	60.4	OHM	+-1% 1/4W
R	73	RES	MF	1.4K		+-1% 1/4W
R	74	RES	CARBON	15	OHM	+-5% 1/4W
R	75	RES	CARBON	15	OHM	+-5% 1/4W
R	76	RES	CARBON	1.5K		+-5% 1/4W
R	77	RES	MF	604	OHM	+-1% 1/4W
R	78	RES	CARBON	47	OHM	+-5% 1/4W
R	79	RES	CARBON	10K		+-5% 1/4W
R	80	RES	CARBON	330	OHM	+-5% 1/4W
R	81	RES	CARBON	1.5K		+-5% 1/4W
R	82	RES	CARBON	1.5K		+-5% 1/4W
R	83	RES	CARBON	47	OHM	+-5% 1/4W
R	84	RES	CARBON	10	OHM	+-5% 1/4W
R	85	RES	CARBON	10	OHM	+-5% 1/4W
R	86	RES	CARBON	47	OHM	+-5% 1/4W
R	87	RES	CARBON	100	OHM	+-5% 1/4W
R	88	RES	CARBON	3.3	OHM	+-5% 1/4W

DESIGNATION		DESCRIPTION					
R	89	RES	CARBON	750	OHM	+-5%	1/4W
R	90	RES	CARBON	270	OHM	+-5%	1/4W
R	91	RES	CARBON	270	OHM	+-5%	1/4W
R	92	RES	CARBON	7.5K		+-5%	1/4W
R	93	RES	CARBON	22K		+-5%	1/4W
R	94	RES	CARBON	27K		+-5%	1/4W
R	95	RES	CARBON	27K		+-5%	1/4W
R	96	RES	CARBON	2.2K		+-5%	1/4W
R	97	RES	CARBON	2K		+-5%	1/2W
R	98	RES	CARBON	2K		+-5%	1/2W
R	99	RES	CARBON	47	OHM	+-5%	1/2W
R	100	RES	CARBON	22	OHM	+-5%	1/2W
R	101	RES	CARBON	22	OHM	+-5%	1/2W
R	102	RES	CARBON	47	OHM	+-5%	1/2W
R	103	RES	CARBON	47	OHM	+-5%	1W
R	104	RES	CARBON	1.2K		+-5%	1/4W
R	105	RES	CARBON	47	OHM	+-5%	1/4W
R	106	RES	CARBON	2.2K		+-5%	1/4W
R	107	RES	CARBON	4.7K		+-5%	1/4W
R	108	RES	CARBON	2.2K		+-5%	1/4W
R	109	RES	CARBON	180K		+-5%	1/4W
R	110	RES	CARBON	220	OHM	+-5%	1/4W
R	111	RES	CARBON	220	OHM	+-5%	1/4W

DESIGNATION		DESCRIPTION			
R	112	RES	CARBON	220 OHM	+-5% 1/4W
R	113	RES	CARBON	220 OHM	+-5% 1/4W
R	114	RES	CARBON	220 OHM	+-5% 1/4W
R	115	RES	CARBON	33K	+-5% 1/4W
R	116	RES	CARBON	2.2K	+-5% 1/4W
R	117	RES	CARBON	2.2K	+-5% 1/4W
R	118	RES	CARBON	1K	+-5% 1/4W
R	119	RES	CARBON	220 OHM	+-5% 1/4W
R	120	RES	CARBON	22M	+-5% 1/2W
R	121	RES	CARBON	470 OHM	+-5% 1/4W
R	122	RES	CARBON	180K	+-5% 1/4W
R	123	RES	MF	6.19K	+-1% 1/4W
R	124	RES	CARBON	270 OHM	+-5% 1/4W
R	125	RES	CARBON	10K	+-5% 1/4W
R	126	RES	SVR 1K	+-10%	
R	127	RES	SVR 2K	+-10%	
R	128	RES	SVR 1K	+-10%	
R	129	RES	SVR 1K	+-10%	
R	130	RES	SVR 200 OHM	+-10%	
R	131	RES	SVR 20K	+-10%	
R	132	RES	SVR 20K	+-10%	
R	133	RES	SVR 100 OHM	+-10%	
R	134	RES	SVR 1K	+-10%	

DESIGNATION		DESCRIPTION			
R	135	RES	SVR 20K	+-10%	
R	136	RES	VR 50KB	+-10%	
R	137	RES	VR 10KB	+-10%	2PORT (SHORT)
R	138	RES	VR 250KB	+-10%	WITH SW
R	139	RES	VR 2KB	+-10%	WITH SW
R	140	RES	VR 10KB	+-10%	2PORT (SHORT)
U	1	IC	MC7815		
U	2	IC	MC7805		
U	3	IC	MC7805		
U	4	IC	LM358		
U	5	IC	MC10116P		
U	6	IC	MC1741		
U	7	IC	MC1741		
U	8	IC	MC1458		
U	9	IC	MC1741		
U	10	IC	MV1741		
U	11	IC	SN75107B		
U	12	IC	SN74H04N		
U	13	IC	MC14066		
U	14	IC	ICM7216D		
U	15	IC	SN74S196		
U	16	IC	SN74S02		

DESIGNATION		DESCRIPTION
X	1	CRYSTAL 10MHz 10PPM
F	1	FUSE 0.5A
S	1	SLIDE SWITCH 115V/230V PCB-TYPE
T	1	TRANSFORMER

(600053002)

CR	57	LED LT-3212 RED SQUARE
CR	58	LED LT-3212 RED SQUARE
CR	59	LED LT-3212 RED SQUARE
CR	60	LED LT-3212 RED SQUARE
CR	63	DISPLAY 5082-7740
CR	64	DISPLAY 5082-7740
CR	65	DISPLAY 5082-7740
CR	66	DISPLAY 5082-7740
CR	67	DISPLAY 5082-7740
CR	68	DISPLAY 5082-7740

1	IC SOCKET 28PIN
2	FUSE HOUSING

DESIGNATION	DESCRIPTION
1	PUSH SWITCH
3	HEAT SINK U-TYPE
2	HEAT SINK
1	3P-2P POWER AC CORD
1	CONNECTOR 3PIN PITCH=3.96mm
10	KNOB IVORY
2	KNOB GRAY
5	KNOB PN-37 BLACK
4	BNC

Topward Electric Instruments Co., Ltd.
Topwind Trading Co.,Ltd.
4F. No. 6, Nanking East Road, Sec. 5, Taipei,
Taiwan, R.O.C.
TEL: 7635760 (5 Lines)
Telex: 12143 TOPWARD
Cable: 'TOPWARD' Taipei,